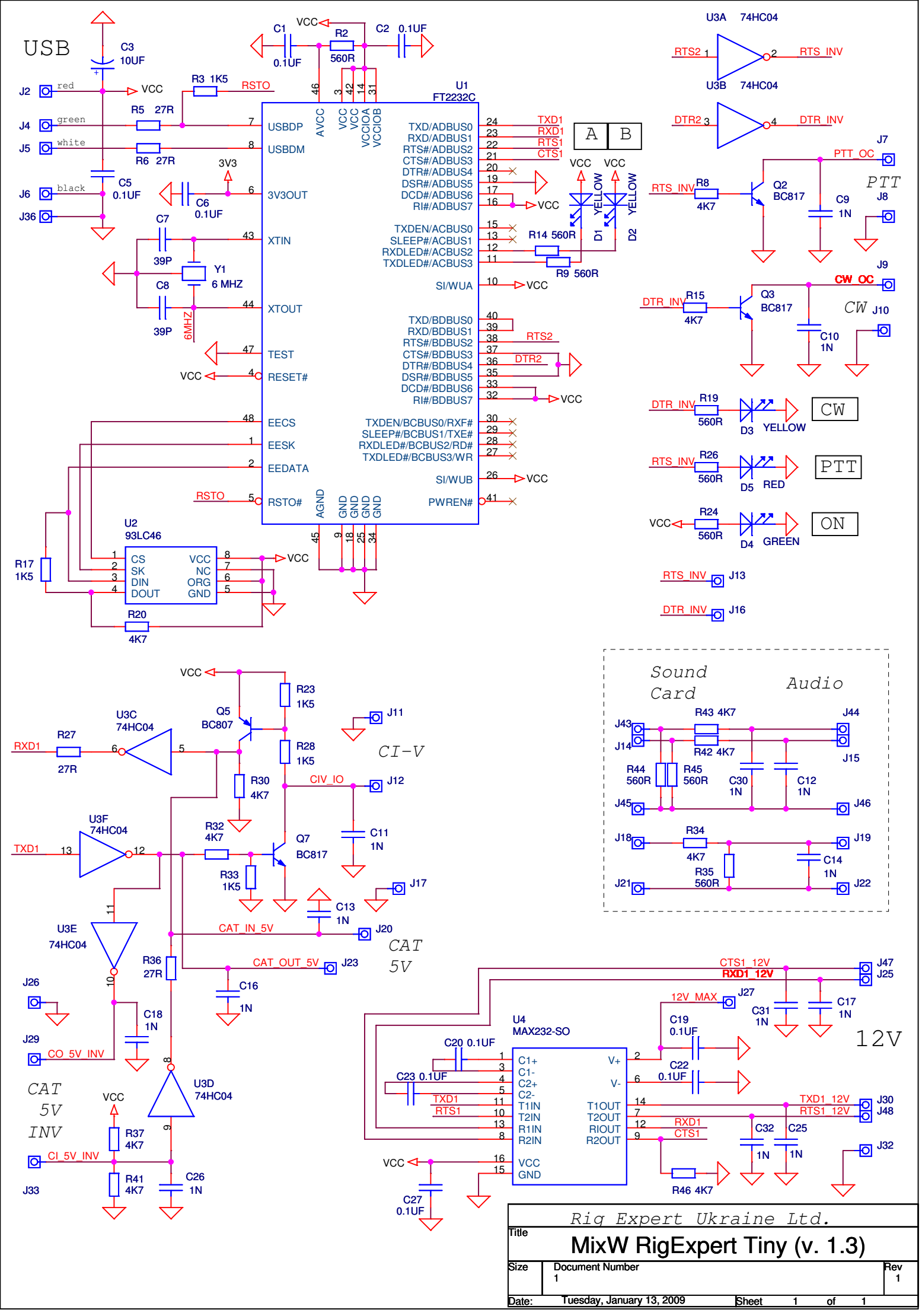
USB
U1
FT2232C
U2
93LC46
U3A 74HC04
U3B 74HC04
U3C 74HC04
U3D 74HC04
U3E 74HC04
U3F 74HC04
U4
MAX232-SO
Q2 BC817
Q3 BC817
Q5 BC807
Q7 BC817
PTT
CW
ON
CI-V
CAT 5V
CAT 5V INV
Sound Card
Audio
12V
Rig Expert Ukraine Ltd.
Title
MixW RigExpert Tiny (v. 1.3)
Size
Document Number
1
Rev
1
Date:
Tuesday, January 13, 2009
Sheet 1 of 1